AIR COMPRESSOR

OPERATION MANUAL

PLEASE FAMILIARISE YOURSELF WITH THE OPERATION MANUAL FIRST BEFORE OPERATING THE AIR COMPRESSOR

IMPORTANT NOTICE

THINGS TO DO BEFORE OPERATING YOUR NEW COMPRESSOR FOR THE FIRST TIME.

1. On the top front of the compressor you will find a white plastic shipping plug inserted into the Oil Filler Hole. Remove the shipping plug and replace by pressing the red Oil Filler Plug (supplied in the parts bag) into the Oil Filler Hole.
2. Also supplied in the parts bag you will find an Air Breather Assembly. Screw the assembly into the hole on the side and at the top of the Compressor Head.
3. Using the Sight-Glass built into the lower front area of the Compressor (just behind the Regulator), check the oil level. It should be at the halfway mark on the Sight-Glass for normal operation. If it is necessary to add oil, please use any standard air compressor oil available at major retailers.
4. There are two Air Outlet Fittings on the Regulator. Air flow for one fitting is operated by turning the Regulator handle. The other is a free flow directly from the tank. Screw either a metal cap or a quick coupler (not supplied) onto the free-flowing fitting before starting the Compressor. Use nylon-seal taper when working with air fittings to prevent leakage.

Contents

1 INTRODUCTION

Read this manual carefully before operating or servicing this air compressor to familiarise yourself with proper safety operation and maintenance procedures. **FAILURE TO COMPLY WITH INSTRUCTIONS IN THIS MANUAL COULD RESULT IN PERSONAL INJURY, PROPERTY DAMAGE AND/OR VOIDING OF YOUR WARRANTY**. Following the instructions in this manual will provide a longer and safer service life for your air compressor.

2 SAFETY GUIDELINES

DANGER – AN IMMEDIATE HAZARD THAT WILL CAUSE SERIOUS INJURY OR LOSS OF LIFE.

1. **TO REDUCE THE RISK OF FIRE OR EXPLOSION. NEVER SPRAY FLAMMABLE LIQUIDS IN A CONFINED AREA**. It is normal for the motor and pressure switch to produce sparks while operating. If sparks come into contact with vapours from gasoline or other solvents, they may ignite causing fire or explosion. Always operate the compressor in a well-ventilated area. Do not smoke while spraying. Do not spray where sparks or flames are present. Keep the compressor as far away from the spray area as possible.
2. The solvents Trichloroethane and Methylene Chloride can chemically react with Aluminium used in paint spray guns, paint pumps etc, and cause an explosion. If you are using these solvents, use only stainless-steel spray equipment. This does not affect your air compressor, but many affect the equipment being used.
3. Never directly inhale the compressed air produced by the air compressor. It is not suitable for breathing purposes.

WARNING – A POTENTIAL HAZARD THAT COULD CAUSE SERIOUS INJURY OR LOSS OF LIFE.

1. Do not weld on the air tank of this compressor. Welding on the air compressor tank will affect the strength and cause an extremely hazardous condition. Welding on the tank in any manner will void the warranty.
2. Never use an electric air compressor outdoors when it is raining or on a wet surface, as it may cause an electric shock.
3. ALWAYS shut off the compressor, remove the plug from the outlet, and bleed all pressure from the system when the compressor is not in use or before servicing.
4. Check the manufacturer's maximum pressure rating for air tools and accessories. Compressor outlet pressure must be regulated so as to never exceed the maximum pressure rating of the tool.
5. High temperatures and moving parts are present under the shroud. To prevent burns or other injuries, DO NOT operate with the shroud removed. Allow the compressors parts to cool before handling or servicing,

6. Be certain to read all labels when you are spraying paints or toxic materials and follow the safety instructions. Use a respirator mask if there is a chance of inhaling anything you are spraying. Read all instructions and be sure that your respirator mask will protect you.
7. Always wear safety goggles or glasses when using an air compressor. Never point any nozzle or sprayer towards a person or any part of the body.
8. Do not adjust the pressure switch or relief valve for any reason. Doing so will void all warranty. They have been pre-set at the factory for the maximum pressure of this unit.

CAUTION – A POTENTIAL HAZARD THAT MAY CAUSE MODERATE INJURY OR DAMAGE TO EQUIPMENT.

1. Drain the moisture from the tank daily. A clean/dry tank will help prevent corrosion.
2. Pull the pressure relief valve ring daily to ensure that the valve is functioning properly and to clear the valve of any possible obstructions.
3. To provide proper ventilation for cooling, the compressor must be kept a minimum of 31cm (12 inches) from the nearest wall, in a well-ventilated area.
4. Fasten the compressor down securely if transporting is necessary. Pressure must be released from the tank before transporting.
5. Protect the air hose and electric cord from damage and puncture. Inspect them weekly for weak or worm spots and replace if necessary.

WARNING	CAUTION!
DISCONNECT POWER AND RELEASE ALL PRESSURE FROM THE SYSTEM BEFORE ATTEMPTING TO INSTALL, SERVICE, RELOCATE OR PERFORM ANY MAINTENANCE.	Never use an extension cord with this product. Use additional air hose instead of an extension cord to avoid power loss and permanent motor damage. Use of an extension cord voids the warranty.

1. Follow all local electrical and safety codes as well as National Electrical Codes (NEC) and Occupational Safety and Health Act (OSHA).
2. Electric motors and starters must be securely and adequately grounded using a three-pronged Outlet.

Record the Model No., Serial No. and Date of Purchase in the space below

Model No. _____

Serial No. _____

Date of Purchase _____

Retain these numbers for future reference

3 Brief Description

This micro air compressor is of novel design and excellent workmanship. Having the advantages of compact construction, fine appearance, light weight, easy operation, high safety and low noise, it can be widely used in machinery, chemical industries, spray and decoration, automatic control system and other fields where compressed air is required.

4 General View and Main Components

1. Main Compressor
2. Pressure Switch
3. Outlet Valve
4. Regulating Valve
5. Pressure Gauge
6. Drain Cock
7. One-way Valve
8. Wheel
9. Discharge Pipe
10. Air Tank
11. Fan Cover

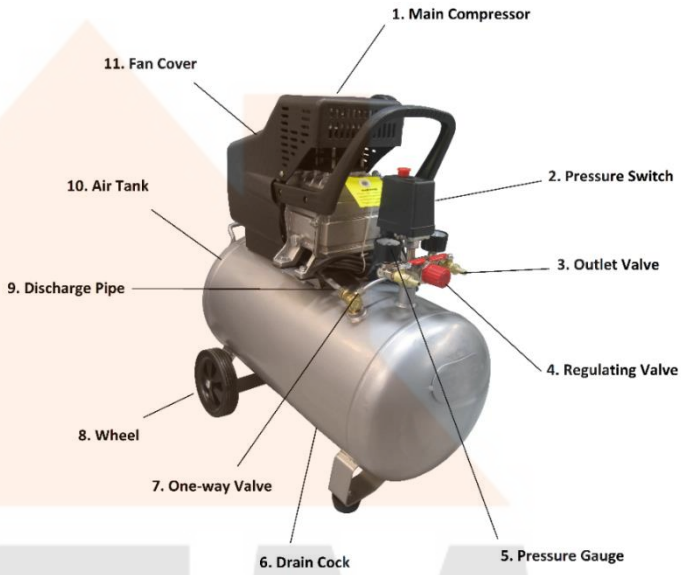

5 Main Technical Parameters

Model	W3D1/24	W3D1/55
Power	3HP	3HP
Voltage	220-240V	
Frequency	50Hz	
Current	7.5A	
Rated Speed	2850 RPM	
Discharge	198L/min (7 cfm)	
Max. Working Pressure	115 psi (7.9 Bar)	
Tank Capacity	24L	50L
Net weight	26kg	35kg
Dimensions (L x W x H)	62.5x 29 x 62 cm	72.5x 33 x 71.5 cm

6 PREPARATION FOR STARTING

1. The working environment for the compressor should be clean, dry and ventilated.
2. Keep the use voltage within ±5% of rated voltage.
3. Keep the oil level within the red circle leveller.
4. The recommended compressor oil is SAE30 or L-DAB 100 in ambient temperatures over 10°C and use SAE10 or L-DAB 68 for ambient temperatures below 10°C.
5. Open the outlet valve, set the knob of pressure switch in position ON. Let the compressor run 10 minutes with no load to ensure lubricating the moving parts before regular service.

7 OPERATION AND ADJUSTMENT

1. The compressor is controlled by the pressure switch under normal working conditions. It automatically stops as pressure reaches the maximum and will restart as pressure decreases to the minimum. The rated pressure has been set at the factory so please do not adjust it. As soon as the motor is switched off, the compressed air in the discharge pipe should be released through the release valve under the switch. This is the necessary condition for restart otherwise the motor will be damaged. The rated pressure can be adjusted by turning the adjusting bolt of the switch. Contact us first before considering adjusting the rated pressure.
2. The outlet pressure of compressed air can be adjusted by the regulating valve.
3. When the compressor is running and needs to be turned off. Only set the knob of pressure switch in position OFF.

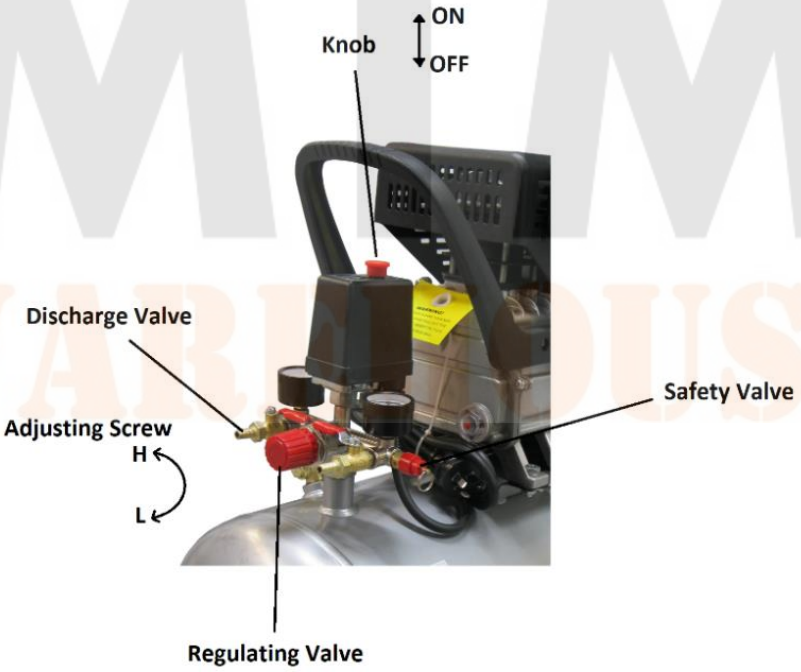

8 CAUTIONS

1. Take the cover off first and put on the air filter before running the air compressor.
2. Never unscrew any connecting parts when the tank is in pressure conditions.
3. Never touch or disassemble any electrical parts before disconnecting the power plug.
4. Never adjust the safety valve carelessly.
5. Never use the compressor in place where voltage is too low or too high.
6. Never use an electrical wire that is more than 5m long with less than the section shown in Table 1.
7. Never disconnect the plug to stop the compressor from running. Set the switch knob to the OFF position instead.
8. If the release valve doesn't work as the motor has stopped, find the cause immediately so as not to damage the motor.
9. Lubricating oil must be clean, and the oil level should be kept in the red circle leveller.
10. Disconnect the plug to cut off the power supply and open the outlet valve.

Motor output (HP/kW)	**220V / 230V / 240V Single Phase**		**110V / 120V Single-Phase**	
	Wire (mm²)	**Fuse (A)**	**Wire (mm²)**	**Fuse (A)**
1.0/0.75	1.5	16	2.0	20
1.5/1.1	1.5	16	2.5	20
2.0/1.5	1.5	16	2.5	20
2.5/2.0	2.0	20	2.5	20

9 MAINTENANCE

1. Clean the crankcase and renew the lubricating oil after the first 10 working hours.
2. Clean the oil level after every 20 working hours and replenish if necessary.
3. Open the drain cock under the tank to exhaust condensate after every 60 working hours.
4. Clean the crankcase and renew the oil, clean the air filter and check the safety valve and pressure gauge.

10 Troubles and Remedies

Trouble	Possible Causes	Remedies
Motor not running, running too slow or getting hot	(1) Fault in the lead or voltage is insufficient (2) Power cable is too thin or too long (3) Fault in the pressure switch (4) Fault in the motor (5) Sticking of the main compressor	(1) Check the lead and your electrical circuit (2) Replace the cable (3) Repair or replace (4) Repair or replace (5) Check and repair
Sticking of main compressor	(1) Moving parts burnt due to the oil being insufficient (2) Moving parts damaged or struck by a foreign body	Check the crankshaft, bearing, connecting rod, piston, piston rings etc and replace if necessary.
Shaking or abnormal noise	(1) Parts are loose (2) A foreign body may have gotten into the compressor (3) Piston knocking the valve seat (4) Moving parts seriously worn	(1) Check and retighten (2) Check and clean away any foreign materials (3) Replace it with a thicker paper gasket (4) Repair or replace
Pressure insufficient or discharge capacity decreased	(1) Motor running too slow (2) Air filter choked up (3) Leakage of safety valve (4) Leakage of discharge pipe (5) Sealing gasket is damaged (6) Valve plate is damaged or there is carbon build-up (7) Piston ring and cylinder worn or damaged	(1) Check and remedy (2) Clean or replace the cartridge (3) Check and adjust (4) Check and repair (5) Check and replace (6) Replace and clean (7) Repair or replace
The oil consumption is too excessive	(1) Oil level is too high (2) Breath pipe choked up (3) Piston ring and cylinder worn or damaged	(1) Keep the level within the red circle (2) Check and clean (3) Repair or replace

11 Parts Illustration

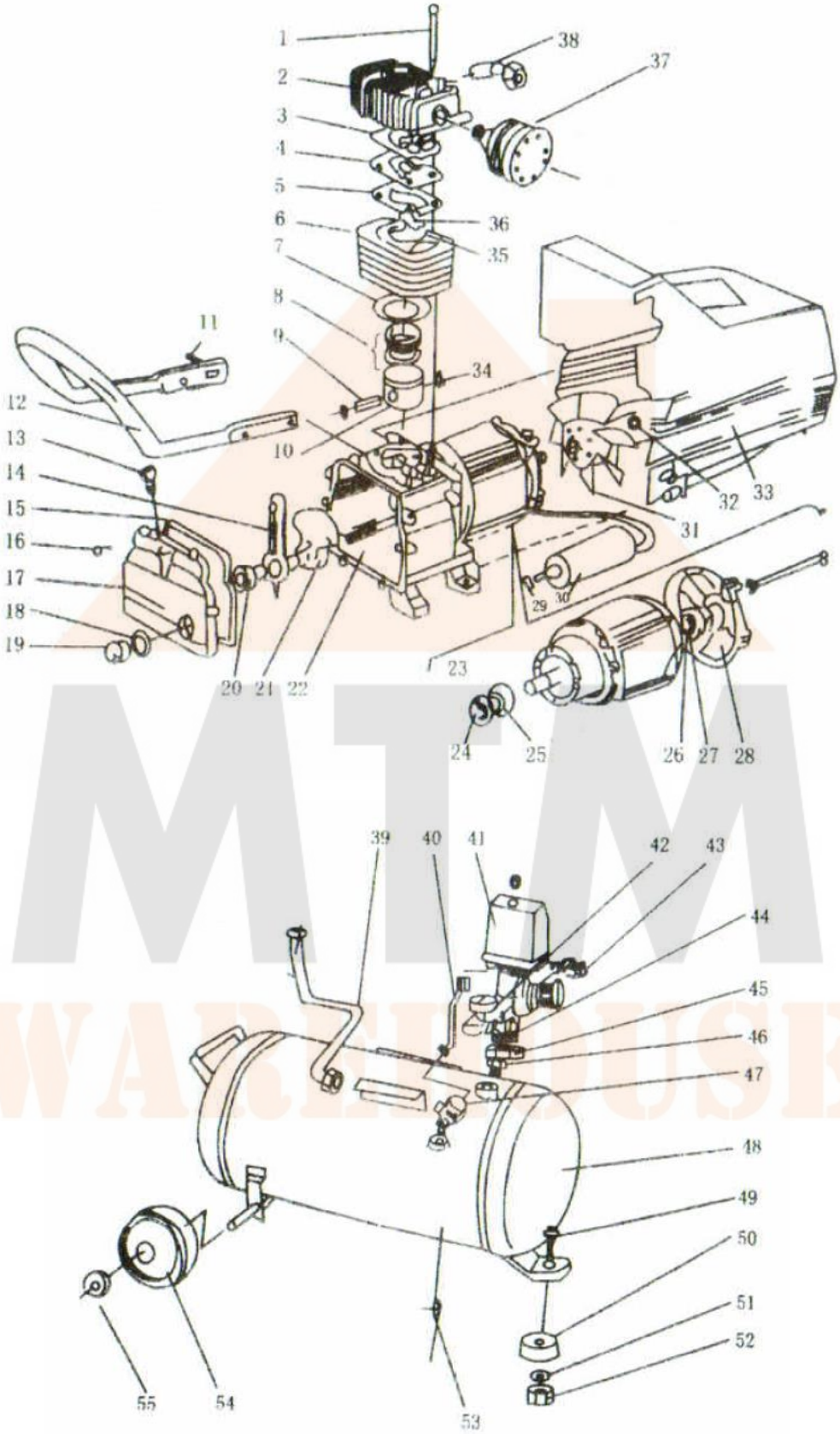

Parts List

No	Designation	Qty		No	Designation	Qty
1	Bolt M8x 110	4		29	Nut M8	1
2	Cylinder head	1		30	Capacitor	1
3	Cylinder head gasket	1		31	Fan	1
4	Valve plate	1		32	Circlip	1
5	Valve gasket	1		33	Fan cover	1
6	Cylinder	1		34	Circlip	2
7	Cylinder gasket	1		35	Locating pin	2
8	Piston ring	3		36	Valve clack	1
9	Piston pin	1		37	Air filter	1
10	Piston	1		38	Connector	1
11	Screw M5x14	4		39	Discharge pipe	1
12	Handhold	1		40	Release pipe	1
13	Breath pipe	1		41	Pressure switch	1
14	Connecting rod	1		42	Pressure gauge	1
15	Rubber gasket	1		43	Outlet valve	2
16	Screw M5x14	6		44	Switch bracket	1
17	Crank case cover	1		45	Connector nut	1
18	Oil leveller washer	1		46	Dischang connect	1
19	Oil leveller	1		47	Unilateralism valve	1
20	Bolt M8x22 - right	1		48	Air tank	1
21	Crank	1		49	Bolt M8x25	1
22	Crank case	1		50	Washer foot	1
23	Motor	1		51	Washer 8	1
24	Sealing right	1		52	Nut 8	1
25	Bearing 6204RS	1		53	Drain cock	1
26	Bearing 6202RS	1		54	Wheel	2
27	Corrugated washer	1		55	Cover piece	2
28	Motor bracket	1				

12 List of Goods

No.	Designation	Qty
1	Air compressor	1
2	Air Filter	1
3	Breath Pipe	1
4	Rubber Gasket	1
5	Operation Manual	1

Address: 5 Lyn Parade, PRESTONS, NSW 2170

E-mail: sales@mtmwarehouse.com.au

Telephone: (02) 9607 4300